FPC-7502

Robust Box PC with Intel® Socket G Core™ i7/i5/Celeron® Platform

Features

- **Fanless Design**
- Wide Range DC Power Input (10 ~ 28V)
- Serial Port with 5V/12V Power Output
- RS-485 Auto-flow supported
- Various Video Interfaces supported (Analog RGB, DisplayPort, DVI)
- Outside Accessible CFast and SIM Slots supported
- Optional WiFi or HSUPA Wireless Connection supported
- Rugged Design for Shock/Vibration Protection
- Easy Installation/Maintenance
- RAID 0, 1 supported

System

CPU	Intel® Socket G 1st Generation Core™ i7/i5/Celeron® processors
Memory	2 x 204-pin DDR3 SO-DIMM sockets, supporting 800/1066MHz SDRAM up to 8GB
Chipset	Intel® QM57
Graphics	Integrated Intel® HD Graphics controller
ATA	2 x Serial ATA ports with 300MB/s HDD transfer rate
LAN Chipset	2 x Intel® WG82574IT GbE controllers
Watchdog Timer	1~255 levels reset

I/O

Serial Port	4 x RS-232 ports via one DB-44 female connector. (COM3 and COM4 are RS-232/485 configurable.)
USB Port	8 x USB 2.0 ports
LAN	2 x RJ-45 ports for GbE
Video Port	1 x DB-15 female connector for Analog RGB
	1 x DisplayPort
	1 x DVI-D female connector for digital video output
Selectable Port	DVI-D by defualt, can be changed to DIO or LPT
	1 x 16-bit digital I/O, 8 in/8 out
	SPP/EPP/ECP mode for LPT
Audio	Mic-in/Line-out (6W pre-amplified)
KB/MS	1 x 6-pin Mini-DIN for Keyboard and Mouse
Expansion Bus	1 x PCIe x16 slot (The power consumption of Graphic card should be under 50 or 60 Watt)
	1 x PCIe x1 slot
	1 x Mini-card socket interconnected with SIM card socket for optional WiFi or HSUPA module
	1 x SIM socket (outside accessible)

Environmental

Operating Temp.	-20 ~ 55°C (-4 ~ 131°F), ambient w/ air flow
Storage Temp.	-40 ~ 85°C (-40 ~ 185°F)
Operating Humidity	10 ~ 95% @ 55°C (non-condensing)
Vibration	3 Grms/5~500Hz/random operation
Shock	Operating 40G (11ms), Non-operating 60G with CFast/SSD

Qualification

Certification	CE, FCC Class A

Power Requirement

Power Input	DC 10~28V input (w/ 4-pin DC input terminal block, combining remote power on/off switch)
Power Consumption	Max. 50W (w/o I/O card)

Storage

Type	2 x 2.5" drive bays for HDD/SSD w/ 9.5mm height limit
	1 x CFast socket, can be outside accessible

Mechanical

Construction	Aluminum alloy
Mounting	Wall-mount
Weight	4.5 kg (9.9 lb)
Dimensions (W x D x H)	195 x 268 x 110 mm (7.68" x 10.55" x 4.33")

OS Support

Windows XP Embedded / Windows XP Professional / Windows Embedded 7 Professional / Windows Embedded 7 Standard

Ordering Information

FPC-7502	Barebone system w/ 1 x PCIe x1 slot and w/o storage device, CPU and memory

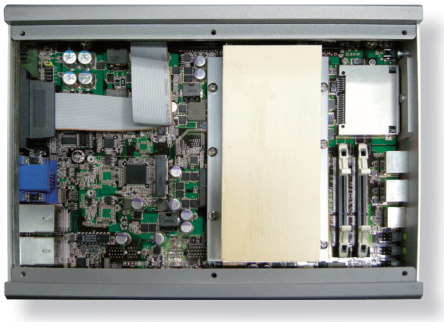

» **Fanless Design**

All specifications are subject to change without notice.

Dimensions

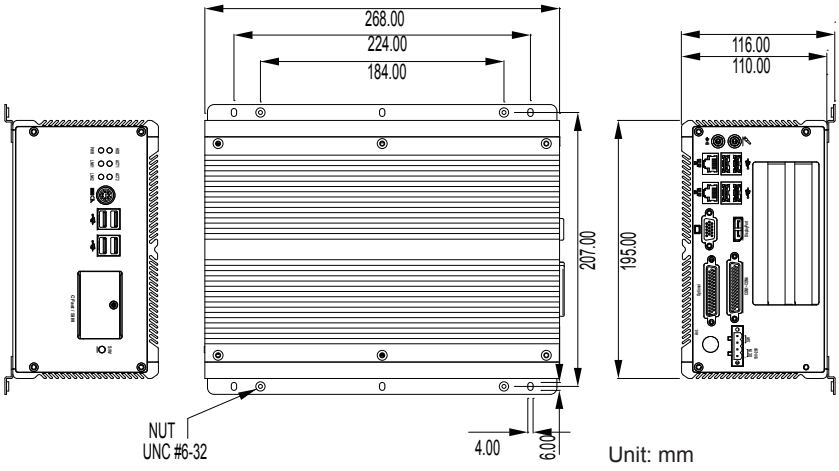

Optional Accessories

PAC-B120W-FSP	19V/6.32A 120W AC/DC adapter kit	
WMK-7000	Wall-mount kit for FPC-7XXX Series	
CBL-7100-COM	4 x COM ports converter cable	

Optional Configuration (CTOS* Kit)

MK-3C-2G-1	DDR3-1333 2GB SDRAM DIMM1 kit	
MK-3C-2G-2	DDR3-1333 2GB SDRAM DIMM2 kit	
MK-3C-4G-1	DDR3-1333 4GB SDRAM DIMM1 kit	
MK-3C-4G-2	DDR3-1333 4GB SDRAM DIMM2 kit	
80GB SSD	Intel® 2.5” 80GB SATAIII SSD kit	
HSPA-SI1400	HSUPA 3.75G module kit & internal wiring	
WIFI-IN1300	Intel® Centrino® Advanced-N 6205 WiFi module w/ 20cm internal wiring	
Core™ i7-620M	Core™ i7-620M 2.66GHz w/ 4M cache	
Core™ i5-520M	Core™ i5-520M 2.4GHz w/ 3M cache	
Celeron® Dual Core P4500	Celeron® Dual Core P4500 1.86GHz w/ 2M cache	
ANT-H11	1 x 2dBi HSUPA antenna	
ANT-D11	1 x WiFi dual-band 2.4G/5G antenna	

**CTOS means Configure-to-Order Service.*

» Front-access CFast & SIM for Easy Maintenance

Remove the screw to open the door

Insert the CFast card

Insert the SIM card